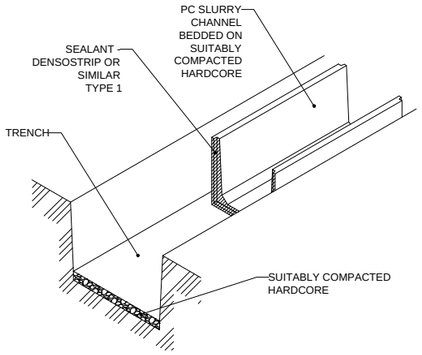

PC SLURRY CHANNEL SYSTEM - FIRST SLURRY CHANNEL BEDDED ON SUITABLY COMPACTED HARDCORE -3D VIEW

NTS

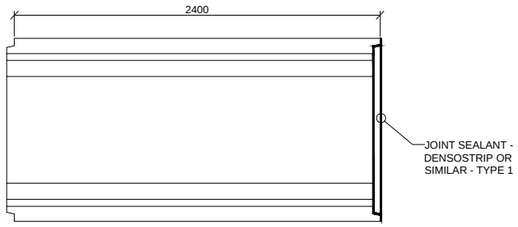

PC SLURRY CHANNEL SYSTEM - FIRST SLURRY CHANNEL - PLAN VIEW

1:20

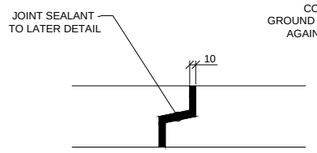

10mm SEALED JOINT TYPE 1 - PLAN VIEW

1:5

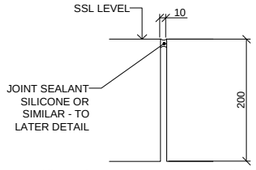

10mm BUTT JOINT TYPE 2 -SECTION

1:5

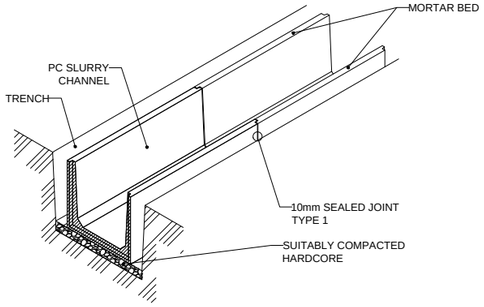

PC SLURRY CHANNEL SYSTEM - ASSEMBLY OF SLURRY CHANNELS BEDDED ON SUITABLY COMPACTED HARDCORE - 3D VIEW

NTS

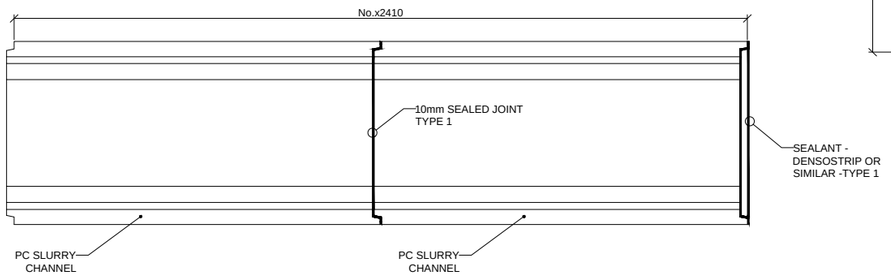

PC SLURRY CHANNEL SYSTEM - ASSEMBLY OF SLURRY CHANNELS - PLAN VIEW

1:20

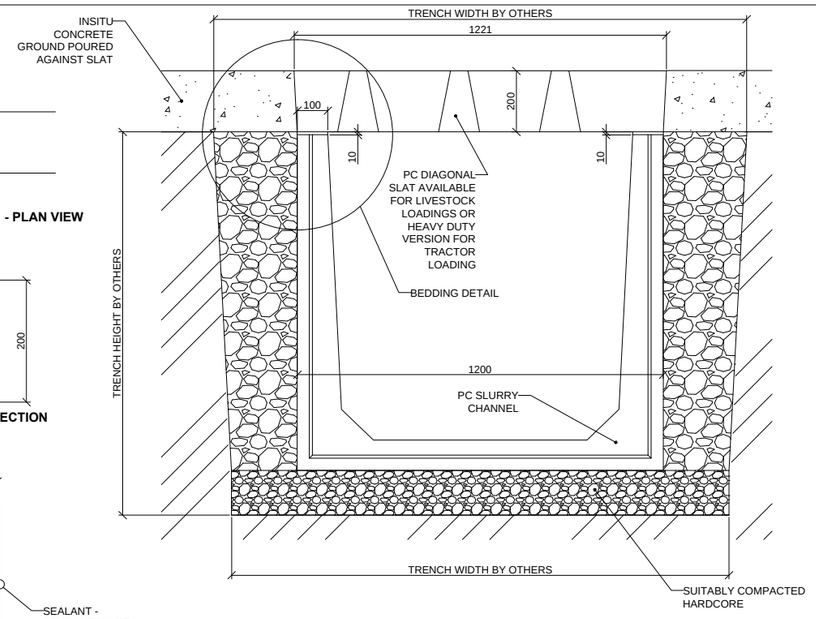

PC SLURRY CHANNEL SYSTEM - TYPICAL CROSS SECTION

1:10

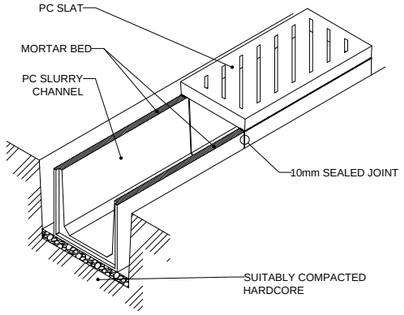

PC SLURRY CHANNEL SYSTEM - PRECAST CONCRETE SLAT BEDDED ON MORTAR BED - 3D VIEW

NTS

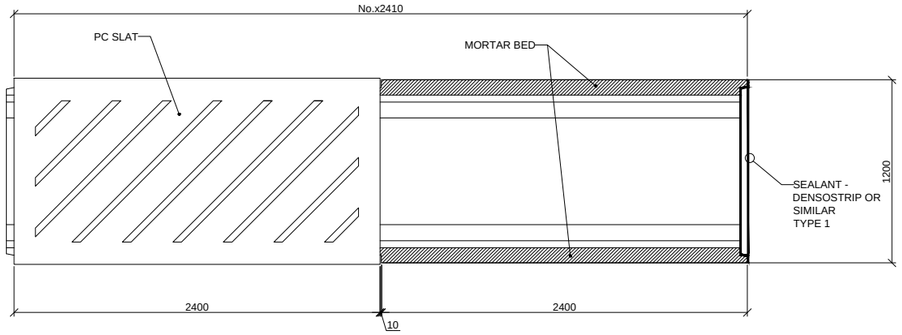

PC SLURRY CHANNEL SYSTEM - PRECAST CONCRETE SLAT BEDDED ON SLURRY CHANNEL - PLAN VIEW

1:20

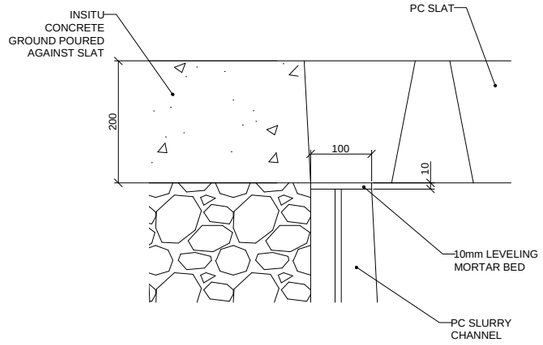

PC SLURRY CHANNEL SYSTEM - TYPICAL BEDDING DETAIL

1:5

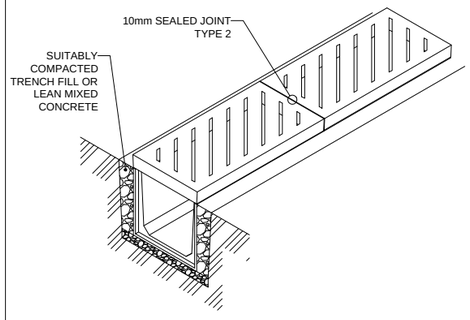

PC SLURRY CHANNEL SYSTEM - PRECAST CONCRETE SLATS BEDDED ON SLURRY CHANNEL - 3D VIEW

NTS

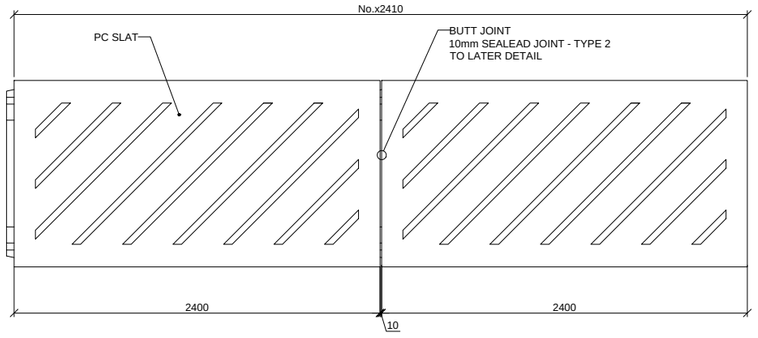

PC SLURRY CHANNEL SYSTEM - PRECAST CONCRETE SLATS BEDDED ON SLURRY CHANNEL - 3D VIEW

1:20

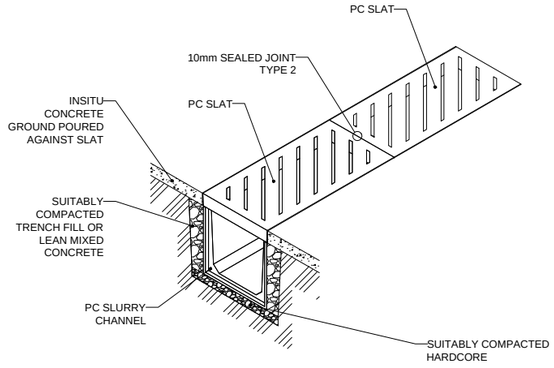

PC SLURRY CHANNEL SYSTEM - FINAL STAGE - 3D VIEW

NTS

Notes:

1.THIS DRAWING IS TO BE READ IN CONJUNCTION WITH ALL THE RELEVANT DRAWINGS.AND SPECIFICATIONS.

2. ALL DIMENSIONS ARE IN MILLIMETERS U.N.O.

3. DO NOT SCALE FROM THIS DRAWING, USE FIGURED DIMENSIONS ONLY!

4. IF IN DOUBT ASK!

Rev	Description	Date
1	Revision 1	28/08/17

CODE	SUITABILITY DESCRIPTION
STATUS	PURPOSE OF ISSUE Issued for Review

CLIENT

Murphy Precast Power

TITLE

Precast Concrete Slurry Channel System

PROJECT

Typical Slurry Channel General Arrangement

DRAWN BY	CHECKED BY	DATE
JB	GAJ	28/08/17

SCALE (@ A3)	PROJECT NUMBER
As indicated	112-001

DRAWING NUMBER	REV
A105	1

28/08/2017 13:03:13